Spanbar Profiles

The most advanced structural roof & facade System available!

Incorporating the clean look of SUNTUF LITE 8, the SUNTUF Spanbar System helps create large spans without the need for unsightly purlins or cross members.

The SUNTUF Spanbar System utilises long spanning aluminium "T" rafters that can free span up to 6.0m using the above sections.

These "T" rafters are light weight but extremely strong giving clean lines to enhance any covered area.

(Longer spans up to 9.0m are achievable using the 10mm and 18mm SUNTUF MULTI – Contact PSP for further details).

PSP Suntuf™ SpanBar

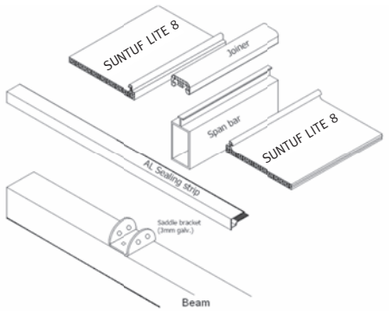

Spanbar Profiles

Spanbar - 60mm

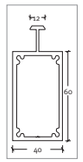

60mm x 40mm
Suits SUNTUF LITE 8
Minimum bending radius - 2000mm
Cantilever skillion - 800mm
(based on 1.0 kPa load)

Support Guide	
Style	Permissible Span
Skillion	4000mm
Curved	5000mm

Spanbar - 75mm

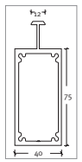

75mm x 40mm
Suits SUNTUF LITE 8
Minimum bending radius - 2500mm
Cantilever skillion design - 1200mm

Support Guide	
Style	Permissible Span
Skillion	5000mm
Curved	6000mm

These spans are calculated on standard roofing applications greater than 5° based on a wind speed of 41m/s (equivalent to 1.0 kPa). At the above spans there is virtually nil deflection.

For vertical applications please consult PSP Limited for recommended support spacing.

Fixing Instructions

Recommended Purlin Spacing

(where there would be virtually no deflection)

Straight Application

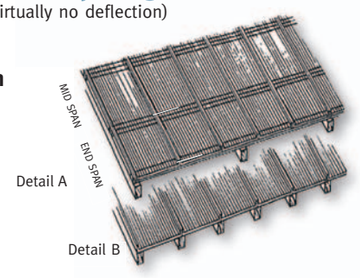

STRAIGHT APPLICATION RECOMMENDED PURLIN SPACING (as per detail A or detail B above)		
	Mid Span	End Span
SUNTUF LITE 8 with Polycarbonate Joiners	900mm	700mm
SUNTUF LITE 8 with Aluminium Joiners	1500mm	1100mm

NOTE: End spans occur at both the top and bottom of a roof fall. For panels with a slope greater than 25, purlin spacings can be increased. Consult PSP for more information.

Curved Application

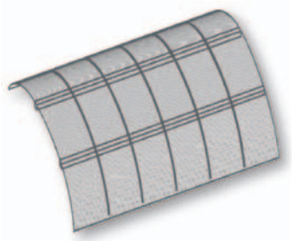

Radius 2000mm min using polycarbonate joiners

Radius 3500mm min using aluminium joiners

CURVED APPLICATION (curved less than 5000mm radius)		
	Mid Span	End Span
SUNTUF LITE 8 with Polycarbonate Joiners	1200mm	1000mm
SUNTUF LITE 8 with Aluminium Joiners	1600mm	1100mm

NOTE: Aluminium joiners may be roll formed to a minimum radius of 3500mm. Polycarbonate joiners will naturally cold curve to a minimum radius of 2000mm.

Roof Fall

A minimum roof pitch of 5° is recommended for the installation of SUNTUF Multi. The recommended fall helps contribute to the natural cleaning process.

Assembly Details & Accessories

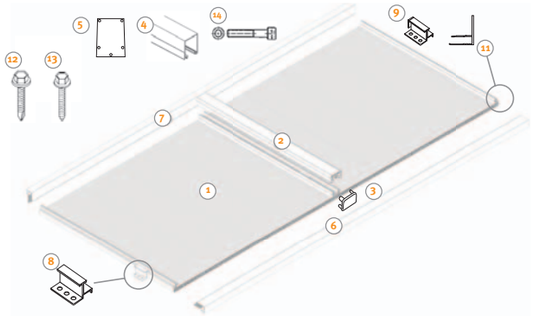

1 Sunpal Multi Sheets (see opposite page for details)

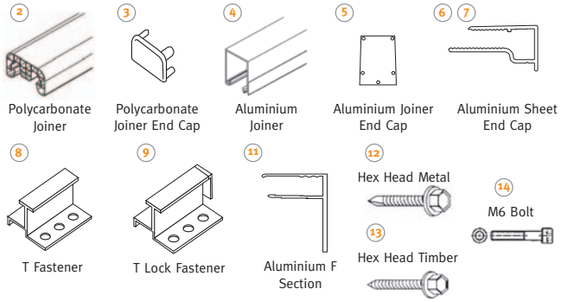

SUNTUF LITE 8 must be installed in accordance with manufacturers recommendation. Contact PSP for installation instructions.

Sheet Profiles

SUNTUF LITE 8mm	
Width	600mm
Length	11980mm Max
Height including standing seam	23.5mm
Height with PC joiner	33.0mm
Height with aluminium joiner	63.0mm
Weight	1.2Kg/ m²
Min Cold Bending Radius	2.0m

SUNTUF LITE 8mm sheets are supplied in project specific quantities not stock sizes. They are sold by metres to the closest metre.

www.psp.co.nz PSP 0800 786 883

PSP Suntuf™ Lite 8

MULTIWALL POLYCARBONATE SHEETING

LIMITED LIFETIME WARRANTY

J10797

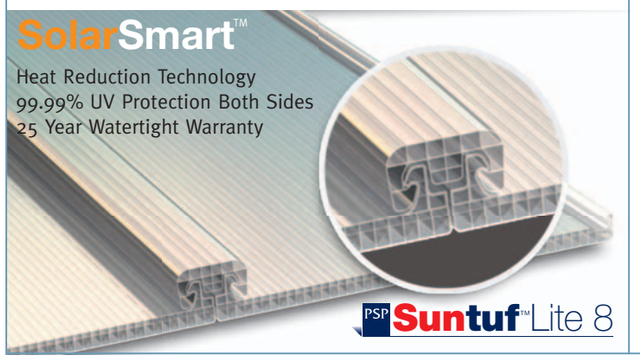

The most advanced roofing system under the sun

SUNTUF LITE 8 is a unique roofing system crafted to withstand the extremes of New Zealand's climate.

Utilising an innovative concealed fix fastening system making it 100% watertight gives you piece of mind that your roof covering will perform at its optimum for many years to come.

This innovatively designed system has been developed allowing the sheets to be easily installed by both tradesmen and the home handyman alike - making SUNTUF LITE 8 perfect for your next roofing project.

LIMITED LIFETIME WARRANTY

SUNTUF LITE 8 carries a performance, or replacement guarantee for the first ten years. The limited lifetime warranty guarantees a loss of light transmission of no more than 8% in the first ten years, and no more than 1% for every year after.

25 Year Watertight Guarantee

SUNTUF LITE 8 is guaranteed for water leak-proof performance for 25 years.

15 Year Guarantee Against Weather Breakage

SUNTUF LITE 8 sheets are warranted for up to 15 years from the purchase date, not to break or fail as a result of impact from hail 25mm in diameter.

For further details of our guarantees, please contact us on 0800 SUNTUF (0800 786 883), or your local SUNTUF stockist.

SolarSmart™

The Solar range (Solar Ice and Solar Control Grey) have the unique near Infra red technology which minimises heat transfer without comprimising light.

99.9% UV Protection on Both Sides

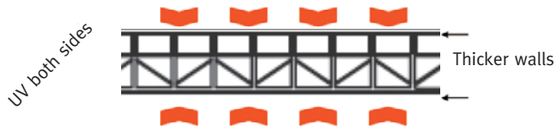

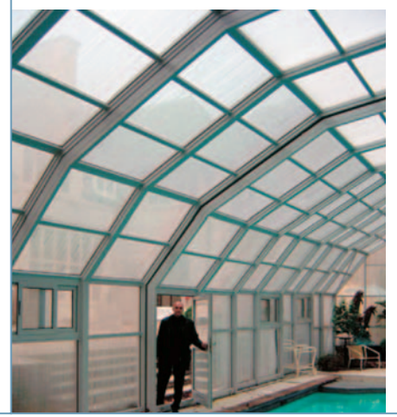

Allowing you to stretch your imagination and giving you

Freedom in Design!

The Advantages that SUNTUF LITE 8 provide are endless...

- Attractive flat panels with **SUNTUF** strength
- New design creating a **lower profile**
- SolarSmart™ technology **reducing cooling cost**
- Delivers **energy efficient** lighting
- Excellent **thermal properties** creating a greener New Zealand
- Extreme **impact resistance**
- Unique fixing system utilising **hex head** screws for a quicker installation
- **100% leak-proof** design
- **25 year** watertight warranty
- 99.9% UV protection on **both sides**
- New **patented T Lock** fastener stops sheets from "slipping"
- Ideal for **curved** designs

PSP Suntuf™ Lite 8