degussa.

Röhm Plexiglas

Guidelines for installation

Hints for installing solid sheets

Ref. No. 312-1 May 2002

PLEXIGLAS® Transparency, Performance, Functionality

Preliminary remarks

• This brochure describes glazing applications for **solid sheets** according to our table of contents. Details concerning transparent noise-control barriers with PLEXIGLAS SOUNDSTOP®, as well as PLEXIGLAS® SP **multi-skin sheets** and PLEXIGLAS® WP **corrugated sheets** or other applications are discussed in separate leaflets which are available from your stockist (see "Distributors" list).

• Additionally, our leaflet entitled "Handling Tips" (Ref. No. 311-5) informs you on the preparatory work and skilful execution of glazing work with PLEXIGLAS®.

• Apart from the recommendations given in this brochure, for which we assume no legal responsibility, you must observe any standards or codes of practice which apply to the use of our products.

• This document supersedes all previous guidelines for installation of solid sheets.

Contents

PLEXIGLAS® XT

Extruded acrylic
(= PMMA = polymethyl methacrylate)
sheets

PLEXIGLAS RESIST® [1)]

Extruded sheets of impact-modified
acrylic

PLEXIGLAS® GS

Acrylic sheets cast between
glass plates

PLEXIGLAS® GS STRETCHED

Cast acrylic biaxially stretched after production. This increases the impact strength of the sheets. PLEXIGLAS® GS 215 STRETCHED is a flame-retarded product version, B1 to DIN 4102

Properties

PLEXIGLAS® is a break-resistant safety glazing material of supreme weather resistance. We guarantee for ten years that it will not turn yellow or become brittle. It is highly light-transmitting (92 % in Clear at 3 mm thickness).
The special grade PLEXIGLAS® XT 24370 is also UV-transmitting.
The IR-reflecting material PLEXIGLAS HEATSTOP® XT offers advantages of quite a different nature; used for domed or continuous roof lights, it lets in daylight whilst reducing undesired heat buildup indoors.
PLEXIGLAS® is very light in weight; a sheet 3 mm thick and measuring one meter square weighs only just 3.6 kg. PLEXIGLAS® can be cold-curved, but certain minimum radii have to be observed.

A particularly break-resistant material during handling, fabricating, installation and in use is impact-modified PLEXIGLAS RESIST®.

[1)] Europ. patent EP 776 931

Physical forms

	Textures	Colors	Sizes (mm)	Thicknesses (mm)
PLEXIGLAS® XT, PLEXIGLAS RESIST®	–	Clear, White, Brown	up to 4050 x 2050	1,5 to 25
PLEXIGLAS® XT textured sheets[1]	D, E, TK, CL, W, R, B, P, Z, Q	Clear and Brown	up to 3050 x 2050	3 to 8
PLEXIGLAS® GS	–	Clear, White, and many different colors	up to 3050 x 2030	1,5 to 25
PLEXIGLAS® GS 215 STRETCHED	–	Clear	up to 3000 x 3000	4

[1] For details on e. g. textured sheets and the types of texture, ask your stockist for leaflets or swatches.

Design hints

(a) Changes in length and allowance for expansion

PLEXIGLAS® sheets expand due to heat and/or moisture and contract in a cold and/or dry climate. Therefore, the fastening systems must be able to yield, so as to allow the sheets to move.
The sheet lengths are to be measured in such a way that the sheets cannot slip out of the glazing sections when they are cold. On the other hand, the material must be able to expand unhindered when it is warm in order to rule out damage due to buckling, for example. Assuming an ambient temperature of 10 °C on installation, the sheets will contract up to 2.5 mm per metre in the cold (Fig. 1). For their expansion due to heat **and** moisture a **general allowance** should be made of

5 mm/m for PLEXIGLAS® *),

which is the distance to the "clear cross-section" of the frame. Because of the possible change in length, the clamping depth of the glazing should be between 15 and 20 mm.

In addition, there is to be a clearance "a" for expansion and compensation for building tolerance. The value "a" depends on the sheet size and corresponds to one half of the general expansion allowance calculated as above (Fig. 2 and 3).

(*) In comparison with basic grades of PLEXIGLAS®, PLEXIGLAS RESIST® sheets, as a result of their increased break resistance, are less rigid and more prone to expand in heat and moisture:

6 mm/m for PLEXIGLAS RESIST® 65 and 75,
8 mm/m for PLEXIGLAS RESIST® 100)

Fig. 1: Heat expansion and cold contraction

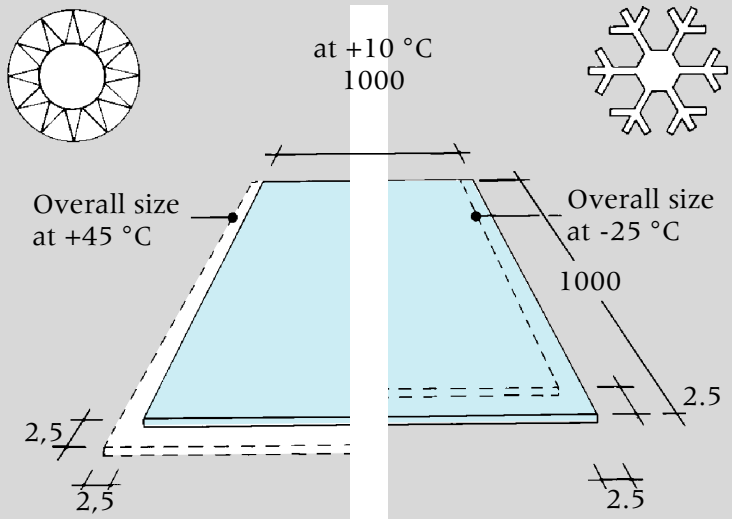

Fig. 2: Example of a metal supporting member

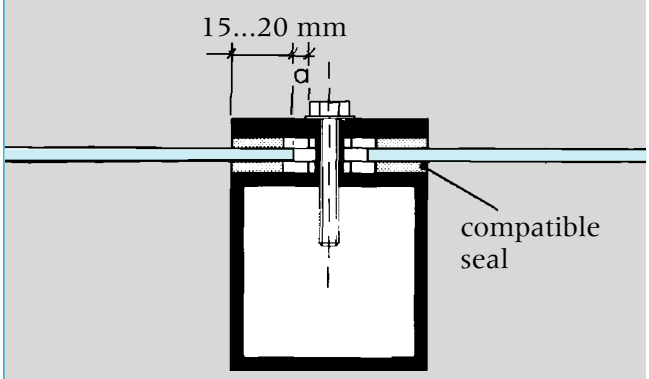

Fig. 3: Example of a wooden frame

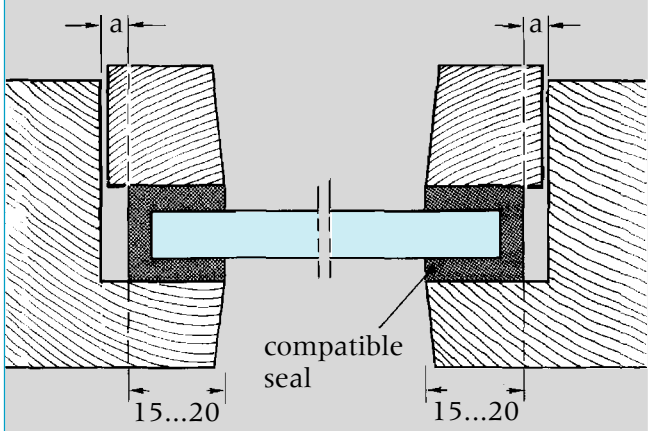

(b) Sealing sections and corner joints

The sealing sections used determine the watertightness of glazing with PLEXIGLAS®. Particularly important is the material they are made of. PLEXIGLAS® is sensitive to certain sealants, which should therefore always be tested for **compatibility.**

Normally suitable:
- EPDM
- polychloroprene
- PE, PTFE, PA
- silicone rubber

Nearly always harmful:
- plasticized PVC
- polysulphides
- PUR foams

The sealing sections must be able to balance the changes in length of PLEXIGLAS® and have to be designed accordingly. **They have to be mechanically secured against slipping out. Bonding is not enough** (Fig. 4)!
The sheets can be additionally sealed with compatible silicone (e.g. KÖDISIL® HAC, SILPRUF, or the like) where this is required or where a gasket is to be held in place. In this case the sheets should not exceed "door panel size".

Corner joints of the seals
Joints and corners of the seals frequently constitute the weak points of glazing in terms of water tightness. Depending on the requirements, the joints should be designed as follows:
- continuous vertical seals with recesses and overlapping horizontal seals which drain into the vertical ones (Fig. 5)
- welded or corner-vulcanized seals (Fig. 6)
- preformed corner sections molded on to straight sections (Fig. 7)

Fig. 5: Continuous vertical seal with recesses and overlapping horizontal seals draining into the vertical ones

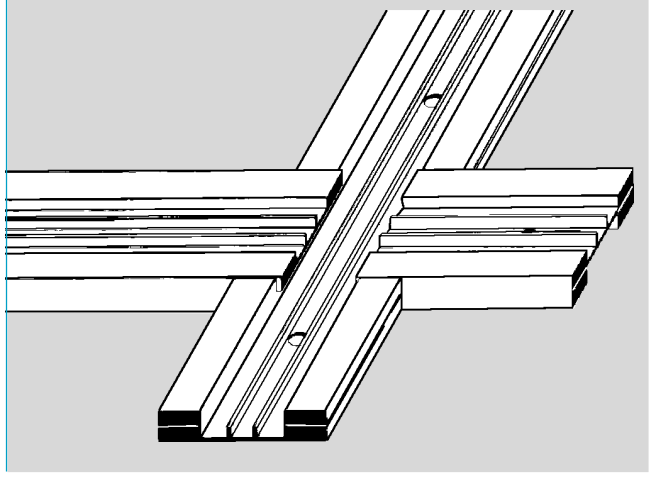

Fig. 6: Welded or corner-vulcanized seals

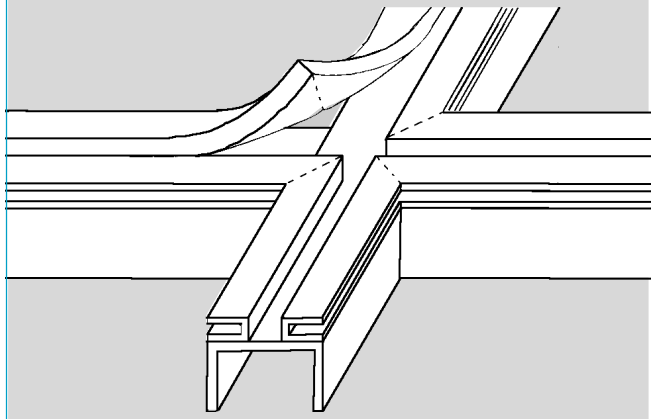

Fig. 4: Different seal sections

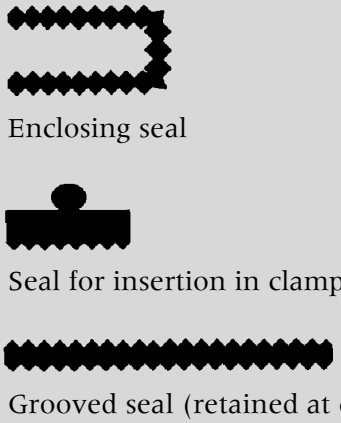

Fig. 7: Prefabricated gasket corner sections molded on to straight sections

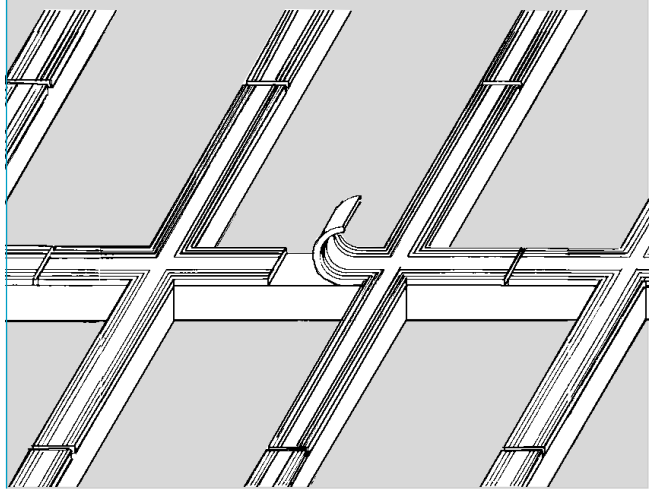

(c) Fastening methods

Structural components made of PLEXIGLAS® can be fastened pointwise or linearly.

Pointwise fastening is suitable for
- small glazing areas,
- irregularly curved glazing,
- inherently stable items, e.g. domed roof lights or thick sheets.

Fig. 32 and 33 show drill holes and screwed connections designed for use with PLEXIGLAS®.

As a general principle, linear fastening is to be preferred since the load conditions are more favorable in this case and thinner sheets can be used as a result. The allowance to be made for expansion is again 5 mm/m for PLEXIGLAS® (PLEXIGLAS RESIST® 6 resp. 8 mm/m).

The linear fastening method is particularly suitable for
- large glazing areas,
- regularly curved glazing,
- cold-curved glazing elements.

In the case of linear fastening, **the change in length is balanced by the sheets sliding in between the seals or by flexing of the seals.** This edge fastening system has to be watertight without being so rigid as to prevent the sheets from moving. Linear fastening has the advantage that the forces resulting from the loads (dead weight, wind, snow) are evenly distributed over the supports. The figures (Fig. 8 to 10) show further details and examples of linear fastening.

Fig. 8: **Linear fastening** usually takes the form of "patent glazing". This consists of the following items:

① retaining screw
② clamping bar
③ gasket
④ spacer, if necessary, to regulate the contact pressure
⑤ supporting member for connection with the substructure; heat-insulated, if necessary

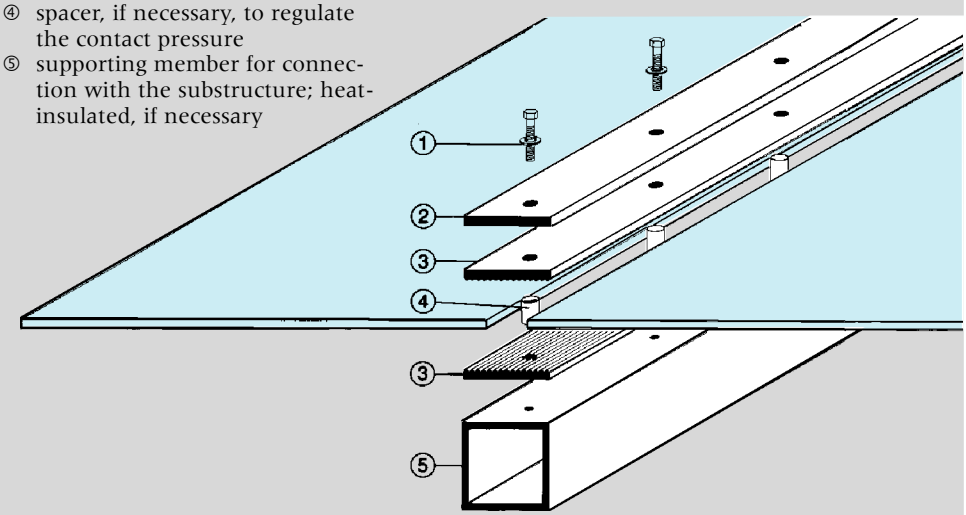

Fig. 9: A **simpler design** can be used where the requirements in terms of tightness and heat insulation are less stringent:

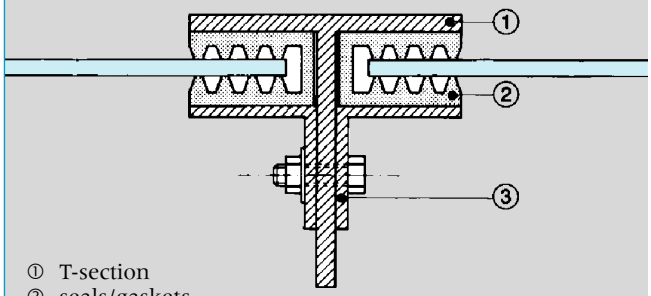

① T-section
② seals/gaskets
③ sheet-holding sections, screwed together

Fig. 10 Structure of **vertical glazing**

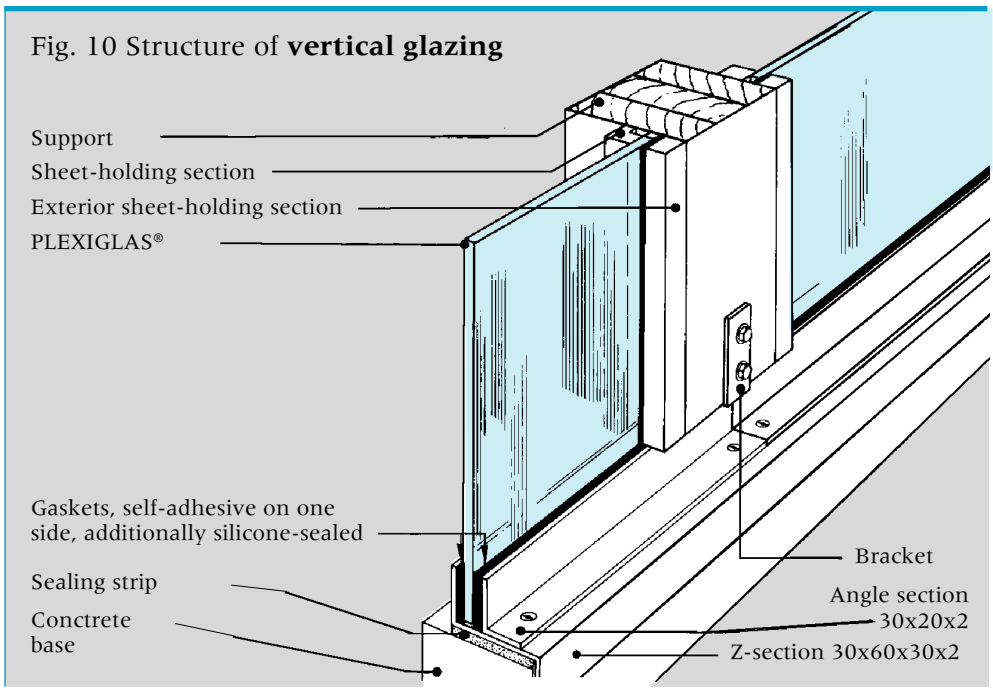

(d) Contact pressure

An important aspect with all constructions is the contact pressure, i.e. the force produced by the screw and transmitted to the elastic sealant via the fastening elements. This pressure must be calculated in such a way that adequate tightness is achieved while the sheets can still slide in response to linear thermal expansion (Fig. 11). If the contact pressure is too high, this may be detrimental to the system. Since the pressure affects above all the weakest link in the fastening system, the elastic seal becomes excessively compressed, whereupon the clamped PLEXIGLAS® sheets can no longer move properly. Depending on the construction and the materials and sealants used for the fastening system, upsetting deformation and buckling occur or the seals are displaced. Thus it may happen that the movement of the sheets causes the seals to slip out of the frames and lose their tightening function (Fig. 12). Apart from that, excessively compressed seals quickly lose their elasticity and thereby also their sealing function (cf. (b) 'Sealing sections').

The structural means shown schematically can be recommended for regulating the contact pressure (Fig. 13 to 18).

Fig. 11: Optimized clamping system

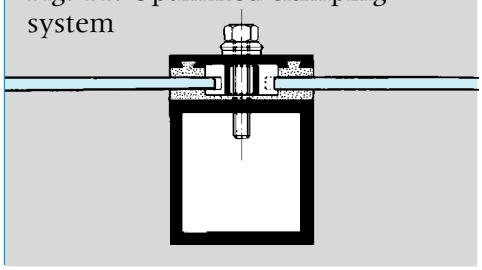

Fig. 12: Too high clamping pressure

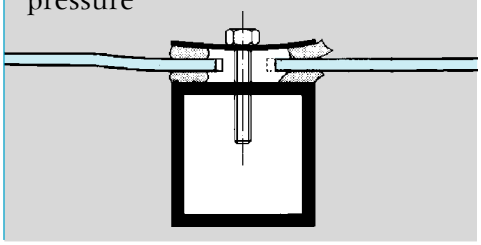

Fig. 13: Spacer sleeve (also for edge protection)

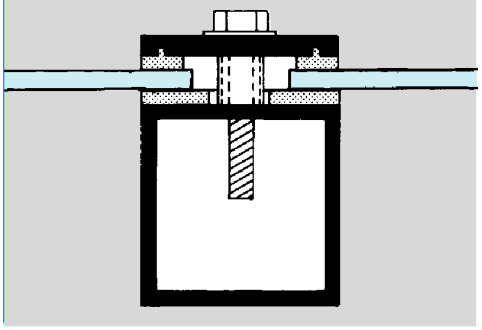

Fig. 14: Set screw with limited thread (economical standard component)

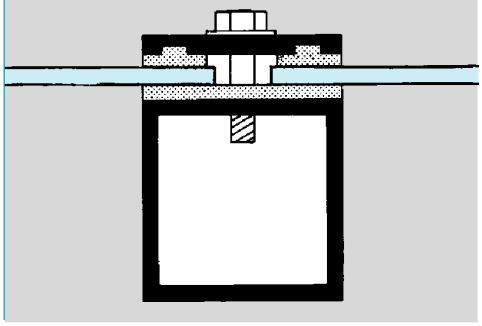

Fig. 15: Screw channel in supporting structure (accurately dimensioned screw)

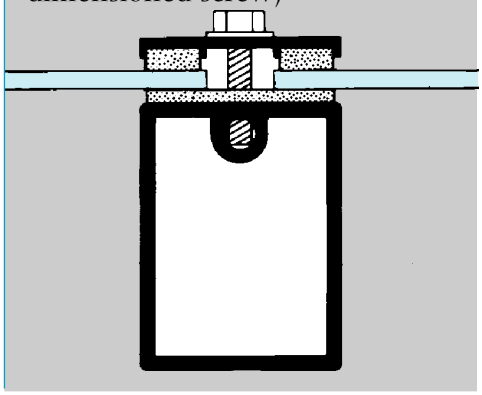

Fig. 16: Rod threaded at both ends

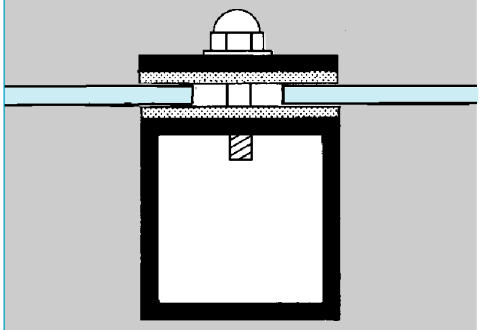

Fig. 17: Threaded rod screwed against buttress beam of identical length (with cap nut)

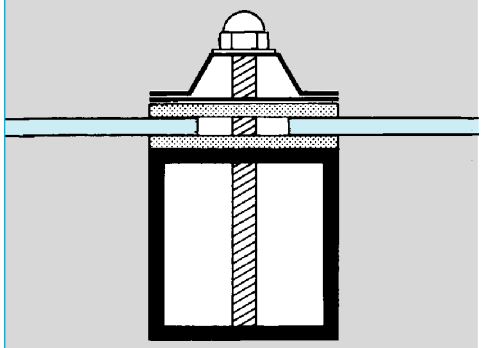

Fig. 18: Clamping system with screw channel serving as spacer

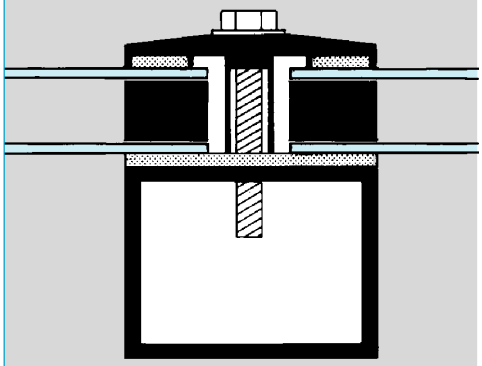

(e) Types of glazing

Single glazing
Applications
- Windows, doors and indoor partitions
- Guards
- Overhead glazing outdoors
- Noise-control barriers
- Safety glazing
- Sight screens.

Single glazing is above all used in areas where protection against the weather is required, but no heat insulation (Fig. 19).

Double and multiple glazing
Double and multiple glazing is installed to satisfy special requirements in terms of heat or sound insulation (Fig. 20 to 22).

Thin sheets of PLEXIGLAS® can be formed with ease. Adequate stability can be achieved by uniaxial (usually cold) or biaxial (always warm) curving of the sheets. Bending of the sheet edge to a right angle provides extra stability, so that even large areas can be double- or multiple-glazed. Therefore multiple glazing of PLEXIGLAS® is particularly suitable for constructions which are designed to be curved (domes, barrel vaults, cones, etc.)

Joining of sheets
The individual sheets are glued to strips of PLEXIGLAS® or light metal sections at the edges, e.g. using compatible double-sided adhesive tape (Fig. 22), or else they are clamped directly as shown in Fig. 20 and 21.

Since PLEXIGLAS® is somewhat permeable to water vapor, double or multiple glazing has to be vented towards the outside, so as to rule out condensate formation as for as possible or else to expel the moisture again. The same applies to rebates. At the lower end of the glazing, holes must be provided for venting and drainage: detail A in the figure showing a longitudinal section through the front end of a double-layer barrel vault (Fig. 22).

Fig. 19: Single glazing

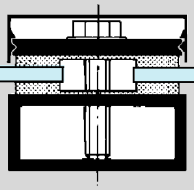

Fig. 20: Double glazing with spacer strip

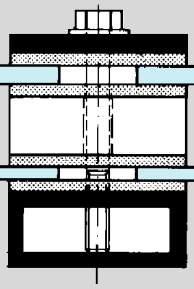

Fig. 21: Double glazing mounted from both faces

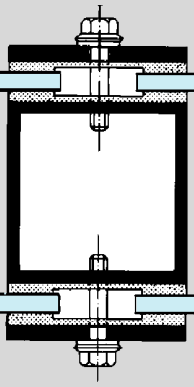

Fig. 22: Front end of double-layer barrel vault with spacer sections

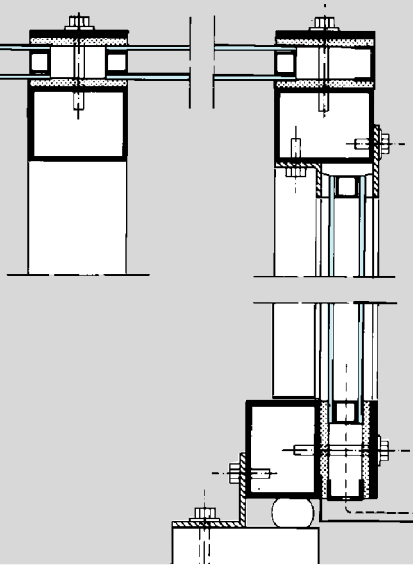

f) Standard details

Our pictures show typical examples of assembly details which suit the special character of PLEXIGLAS® sheets (principles only, not product recommendations).

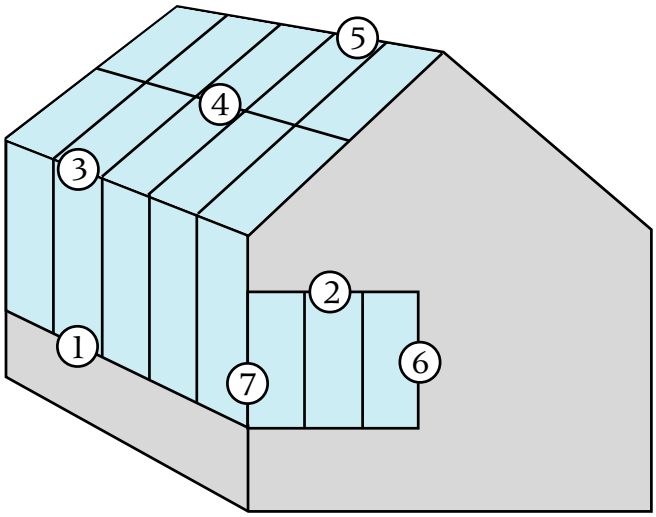

① **Vertical glazing,**
lower end
- Contact pressure regulated via spacer sleeve over threaded rod
- Spacer sleeve also protects sheet edges against sharp thread
- Weather seal with a sloping face protects against stagnant water
- Condense drainage via spacer strip
- Baffle plate all across glazing bar guides water

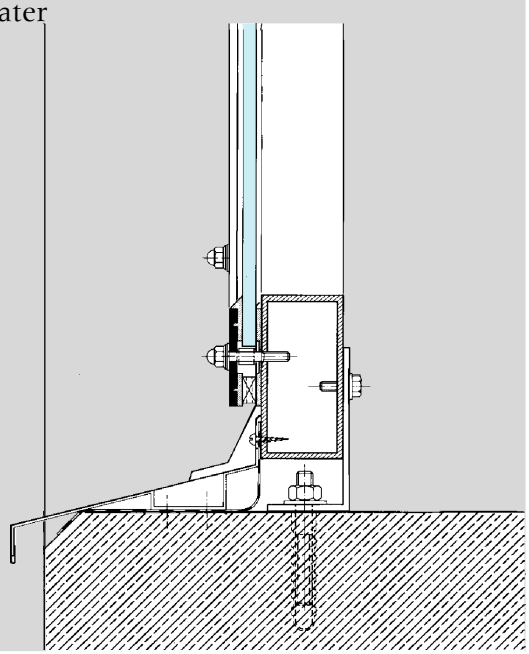

④ **Sloping glazing,**
horizontal joint
- Contact pressure regulated via projecting screw channel
- Seal with sloping face protects against stagnant water
- Baffle plate to guide water extends over second sealing plane
- Allow adequate room for expansion at the sheet

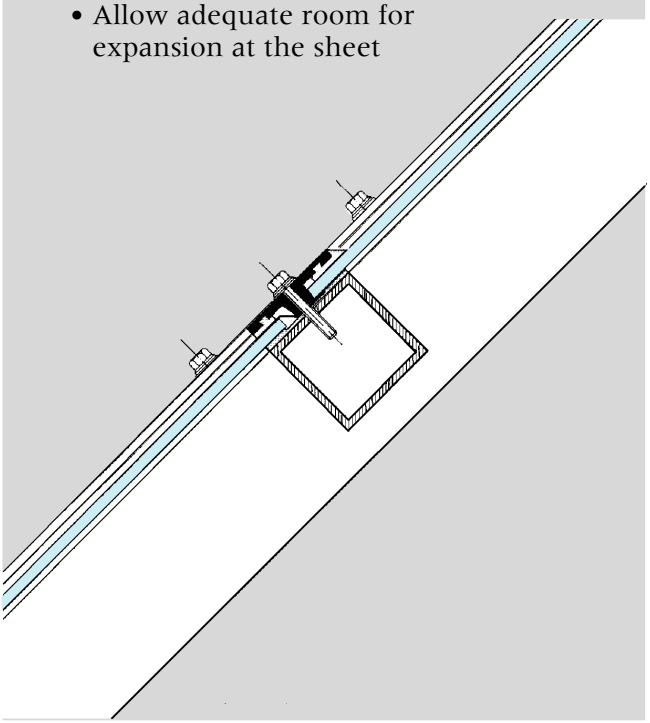

⑤ **Sloping glazing,**
ridge
- Contact pressure regulated via projecting screw channel
- No cold bridges because of insulation
- Allow enough room for expansion of the sheet

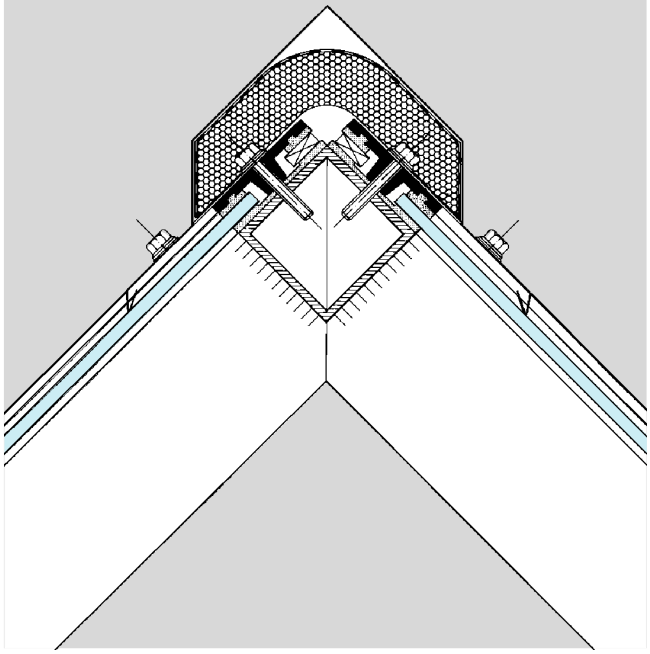

② **Vertical glazing,**
upper connection
- Contact pressure regulated via threaded rod and cap nut
- Allow enough room for expansion at the sheet

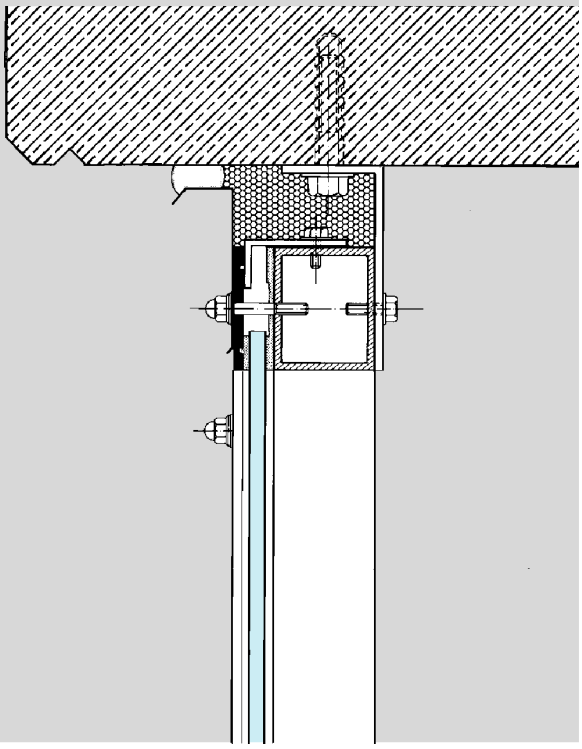

③ **Sloping glazing,**
eaves over vertical glazing
- Contact pressure regulated via limited thread of a threaded rod plus cap nut
- Threaded rod penetrates shim

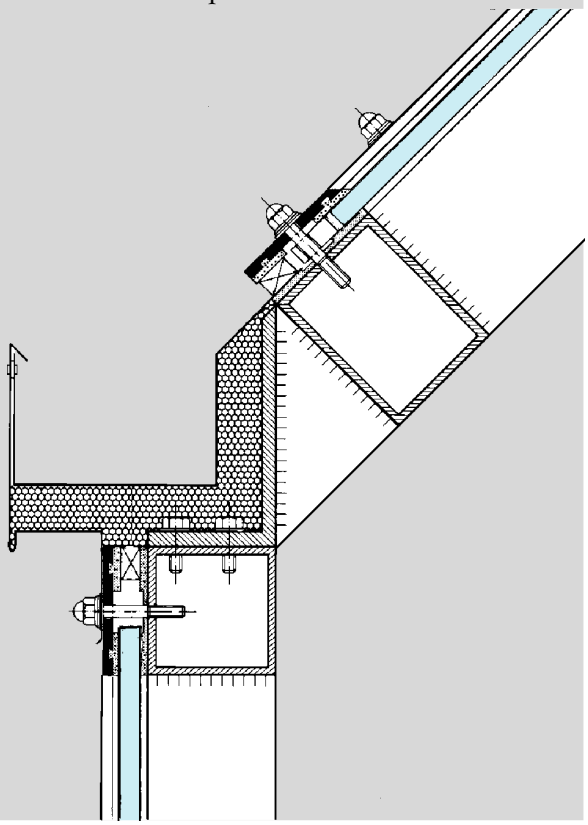

⑥ **Vertical glazing,**
lateral connection
- Contact pressure determined by threaded rod and cap nut

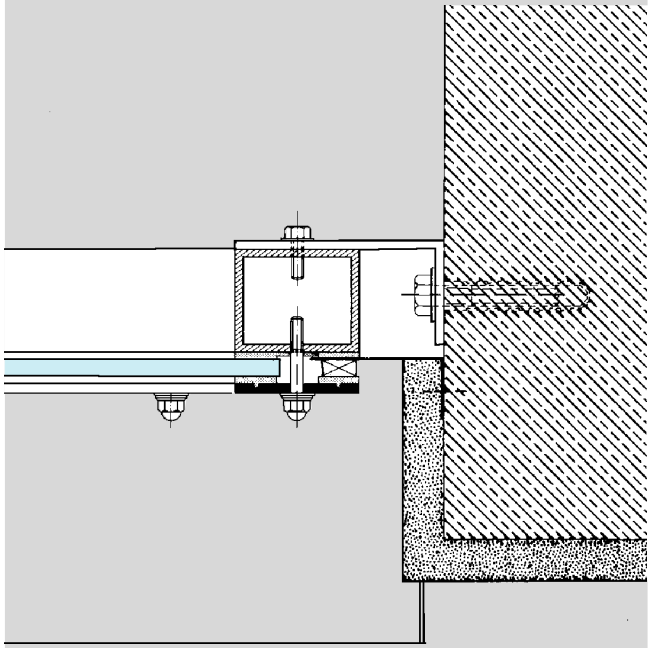

⑦ **Vertical glazing,**
corner connection
- Contact pressure determined by threaded rod and cap nut
- Angle section covers corner

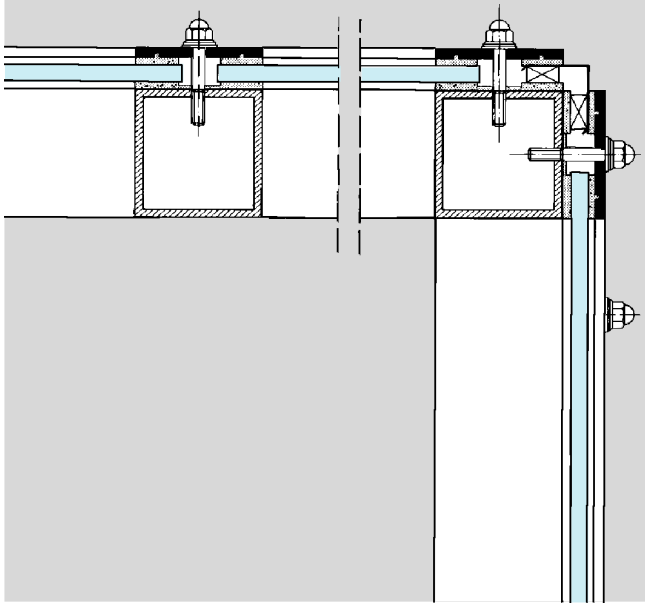

Applications

The details described so far open up a wide variety of applications. PLEXIGLAS® sheets are the materials of choice wherever windows, doors, gates, guards and roofs call for break-resistant to unbreakable or light-weight glazing.

PLEXIGLAS® GS resp. XT e.g. for heat-insulating secondary window glazing in private houses and public buildings, factory units and sports halls; for break-resistant glazing in curtain walls and glazed openings for industrial, commercial and agricultural use, within sports complexes (safety glazing for ice hockey rinks from 12 mm in PLEXIGLAS® XT and 6 mm in PLEXIGLAS RESIST® 65, -75 and -100) and for dance floors.

PLEXIGLAS RESIST® e.g. as secondary glazing in private houses, public buildings, factory units and sports halls, schools, kindergartens, bus shelters; as anti-burglar glazing in shop windows of jewelers, furriers, carpet and gun dealers; as a safeguard against vandalism and terrorist attack.

PLEXIGLAS® XT textured sheets are particularly suitable for applications which require transparency to light but not to the view, e.g. in balcony guards, staircase balustrades, door panels and partitions.

On the special requirements to be met by our glazing materials, "UV protection" and "Protection against attack", follow two separated remarks.

• UV protection

If light-sensitive exhibits like paintings, drawings, prints, stamps, textiles, leather etc. are exposed to daylight, they may be permanently harmed by fading, yellowing or embrittlement. Since the short-wave, ultraviolet portion of the illuminating radiation is primarily responsible for these effects, replacement or secondary glazing with a UV-filter effect - instead of or additionally to conventional mineral glazing with a permeability of about 15 % - serves a protective function here.
On the other hand, however, the wavelength of 380 nanometers which is regarded as the end of the ultraviolet range does not constitute a sharply defined boundary between photochemical attack and safety of the irradiated material, so that filter glazing whose permeability begins at longer wavelengths in the visible range affords much better protection. Such glazing sheets are then no longer clear-transparent but of a yellowish-orange color. The table presents a few PLEXIGLAS® grades whose UV permeability is particularly low.
Owing to their reflex-scattering effect, sheets of PLEXIGLAS SATINICE® **AR** (= antireflective) are used for picture glazing with the picture directly behind.
A figure illustrates the increased protection afforded by some transparently colored PLEXIGLAS® GS grades (Fig. 23).

Fig. 23: Spectral transmittance values τ(λ) of different colored grades of PLEXIGLAS® GS; thickness 3 mm

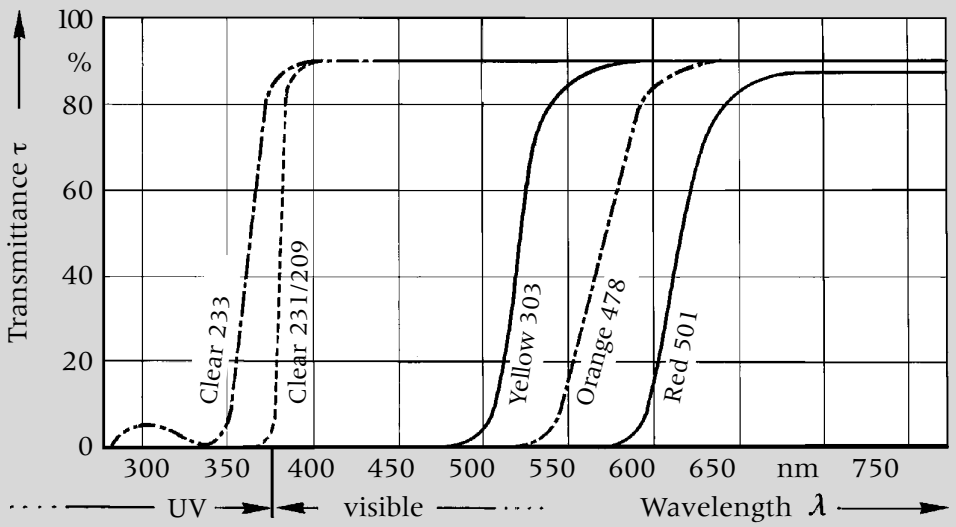

Grade	UV permeability (global radiation) %	
PLEXIGLAS® GS	Clear 209	9
	Clear 231	<1
	White 010	<1
	White 060	<1
PLEXIGLAS SATINICE®	Clear 21570 AR	<1
PLEXIGLAS® XT	White 05070	4

Conclusion: **PLEXIGLAS® GS Clear 231 or PLEXIGLAS SATINICE® Clear 21570 AR afford very good protection against UV radiation, whereas PLEXIGLAS® GS Yellow 303 is completely UV-absorbing.**

- **Protection against attack ("safety glazing")**

Glazing protecting against attack has been standardised to DIN 52 290 1); procedures are running for standardisation throughout Europe. It is defined as a translucent or transparent material based on glass or plastics, single- or multilayer, which offers resistance to violent attack.

The different types of attack and the corresponding resistance classes are described in parts 2 to 5 of this standard. Table 1 shows which of our semifinished products have been successfully tested for certain resistance classes:

Table 1: PLEXIGLAS® grades tested for use in glazing protecting against attack

DIN 52290	Resistance class	Sheet material with test certificate	Testing institute
Part 1: **Terms**			
Part 2: **Anti-bullet glazing**			
	C1	PLEXIGLAS® GS 222, 40 mm	Beschussamt D-89081 Ulm
Anti-bullet glazing impedes the penetration of ammunition	C2	PLEXIGLAS® GS 222, 60 mm	
	C3	–	
Category: C	C4	–	
	C5	–	
Part 3: **Glazing impeding breakthrough** Category: B			
Teil 4: **Glazing resistant to thrown objects** Category: A		(at the moment no test reports existing)	
Teil 5: **Glazing reducing explosive effects** Category: D			

1) DIN standards are available from Beuth Verlag, Burggrafenstraße 6, D-10243 Berlin

(a) Flat roof and vertical glazing

The required thickness of PLEXIGLAS® sheets depends on

- the envisaged use
- the rebate depth (= clamping depth plus half allowance for expansion; see "(a) Changes in length and allowance for expansion"),
- the sheet size,
- the snow and wind loads to be assumed for a given location (e.g. to DIN 1055).

For flat sheets that are clamped all around, the thickness can be taken from Tables 2a and b. To this end look at Table 2a first and read the area factor (letter) corresponding to the given length and width. Together with the load this leads to the recommended thickness in Table 2b.

Table 2a: Calculation of the area factor

Length or width in m	0.25	0.50	0.75	1.00	1.25	1.50	1.75	2.00	2.25	2.50	2.75	**3.00**	3.25	3.50	3.75	4.00	4.25	4.50	4.75	5.00
0.25	A	A	A	A	A	A	A	A	A	A	A	A	A	A	A	A	A	A	A	A
0.50	A	B	C	D	D	D	D	D	D	D	D	D	D	D	D	D	D	D	D	D
0.75	A	C	E	F	G	G	G	G	G	G	G	**G**	G	G	G	G	G	G	G	G
1.00	A	D	F	H	I	I	K	K	K	K	L	L	L	L	L	L	L	L	L	L
1.25	A	D	G	I	K	L	M	N	N	O	O	O	O	O	O	O	O	O	O	O
1.50	A	D	G	I	L	N	O	P	Q	Q	Q	R	R	R	R	R	R	R	R	R
1.75	A	D	G	K	M	O	Q	R	S	T	T	T	U	U	U	U	U	U	U	U
2.00	A	D	G	K	N	P	R	S	T	U	V	V								

Table 2b: Calculation of the sheet thickness in mm;
above PLEXIGLAS® GS and XT, below PLEXIGLAS RESIST® 65

Load in N/m²	A	B	C	D	E	F	**G**	H	I	K	L	M	N	O	P	Q	R	S	T	U	V
600	2	3	3	4	4	5	5	6	6	8	8	8	8	10	10	10	10	12	12	15	15
	3	4	4	5	5	6	6	8	8												
750	2	3	4	4	5	5	**6**	6	8	8	8	8	10	10	10	12	12	12	12	15	15
	3	4	5	5	6	8	**8**	8													
960	3	3	4	4	5	5	6	6	8	8	10	10	10	10	12	12	12	15	15	15	15
	3	4	5	6	6	8	8														
1500	3	4	5	5	6	6	8	8	10	10	12	12	12	12	12	15	15	15	15	20	20
	4	5	6	8	8																
2000	4	4	5	6	6	8	10	10	10	12	12	12	15	15	15	15	20	20	20	20	20
	4	6	8	8																	
3000	4	5	6	8	8	8	12	12	12	15	15	15	15	20	20	20	20	20	25	25	25
	5	8																			

The upper value applies to PLEXIGLAS®, the lower one to PLEXIGLAS RESIST® 65. In this case a deflection of 1/50 of the sheet width (= 2 %) - a permissible value for plastics - is not exceeded, so that aesthetic appearance and economy are guaranteed.

Moreover, the recommended thicknesses are calculated so as not exceed the maximum permissible material stress of 10 MPa at the given load.

The data are based on calculations, experimental results and long-term experience.

Where written proof is required in individual cases, a structural engineer has to be entrusted with the static calculation.

Example: A roof with an expected snow load of 750 N/m2 is to be glazed with sheets 3 m long and 0.75 m wide. According to Table 2a, these dimensions lead to an area factor G which together with the load in Table 2b shows this result: 6 mm thickness for PLEXIGLAS® GS / XT or 8 mm for PLEXIGLAS RESIST® 65.

Exceptions:

- If the sheets are **clamped at the long sides only**, the **second next high est sheet thickness** according to Table 2b should be used, e.g. 8 mm instead of 5 mm, 15 mm in stead of 10 mm etc., to be on the safe side.
- Where the main reason for choosing for PLEXIGLAS RESIST® is protection against vandalism, and as **long as in creased deflection is no problem**, the sheet thickness according to Table 2b **can be fallen short** of if the **rebate depths are increased** at the same time (see "Secondary glazing").

(b) Secondary glazing

Secondary glazing means glazing installed in front of or behind existing wall, door and window glazing. Although it also serves for heat and sound insulation, its main purpose is usually to protect against damage caused by unruly children and youngsters, carelessness, shock, stones thrown against it, acts of vandalism etc. (see also "Protection against attack").
Since this calls for a very impact-resistant material, we recommend PLEXIGLAS RESIST®.

Against break-ins:

- A second glazing sheet of PLEXIGLAS RESIST® on the inside of the existing glazing: The burglar, having damaged the glass pane, is confronted with impact-resistant PLEXIGLAS RESIST® which offers remarkable resistance against his standard tools.

Against aggression, vandalism and terrorism:

- A second outer pane of PLEXIGLAS RESIST® affords superior protection against hurled objects or impact stress of windows in private and public buildings and churches, for example: The impact-resistant PLEXIGLAS RESIST® sheet wards off things thrown or hit against it and prevents the glass behind it from breaking.

Normally a rebate depth of 25 mm is adequate for this purpose.

Given substantial rebate depths, or if the sheets are additionally secured by screwed connection with the frame, the thickness according to Tables 2a/b may be reduced. Since glazing installed mainly to ward off attacks may yield more strongly than "ordinary" window glazing, the thickness of the PLEXIGLAS RESIST® sheets can remain one or two steps below the tabulated value (e.g. 6 or 5 mm instead of 8 mm).

PLEXIGLAS RESIST® sheets that are installed in front of existing glazing should be spaced at about 60 to 70 mm in order to be able to flex freely after an impact without damaging the glass. This applies to PLEXIGLAS RESIST® sheets of size 2000 x 1200 mm and 8 mm thick, for example.

When cutting the sheets to size it must be borne in mind that PLEXIGLAS RESIST® needs an allowance for expansion of c. 6 mm per meter of edge length.

PLEXIGLAS RESIST® sheets are to be provided with an all-around rubber seal, inserted in a clamping frame and then screwed to the door or window frame or anchored in the masonry.

When selecting the seal, care must be taken that it is compatible with PLEXIGLAS RESIST®, which is true of EPDM, for example. The clamping sections used with the PLEXIGLAS RESIST® sheets must be stable enough to resist shock and impact without separating from the existing frames or releasing the sheets. Apart from the clamping sections specially designed for use with PLEXIGLAS RESIST®, commercially available angle sections similar to those shown in the figures can be used (Fig. 24 to 27).

Fig. 24: PLEXIGLAS RESIST® secondary glazing: Principle sheet inside, clamped onto wooden frame

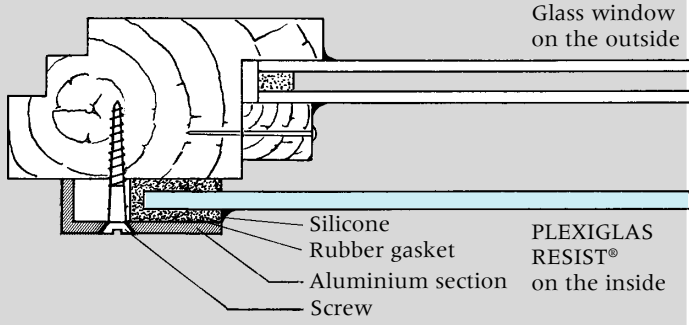

Fig. 25: PLEXIGLAS RESIST® secondary glazing: Principle sheet inside, clamped onto metal frame

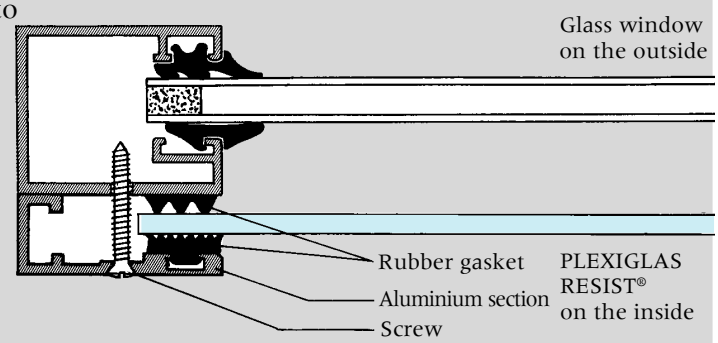

Fig. 26: PLEXIGLAS RESIST® secondary glazing: Principle sheet outside, clamped onto wooden frame

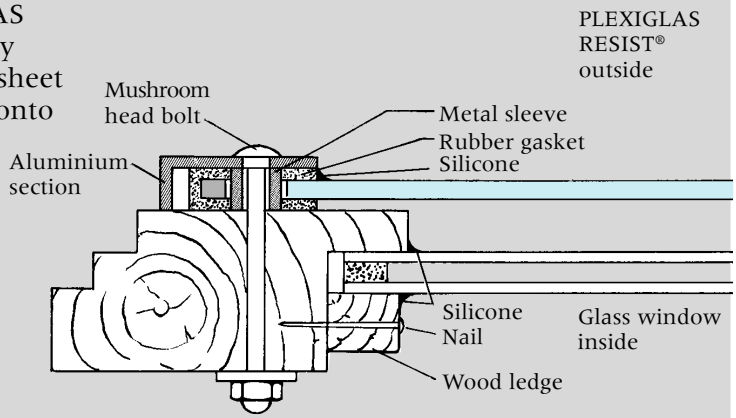

Fig. 27: PLEXIGLAS RESIST® secondary glazing: Principle sheet inside, riveted/clamped onto metal frame

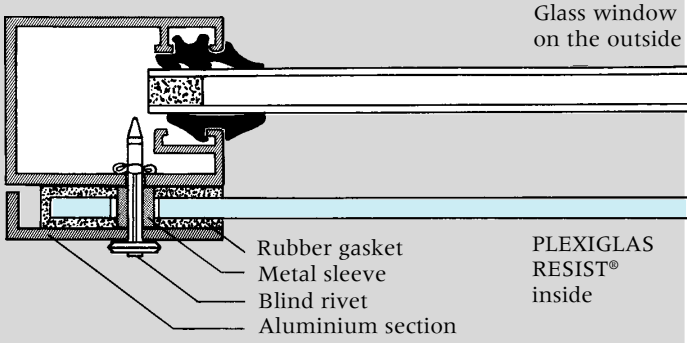

(c) Barrel vaults roof glazing

The barrel vault roofs frequently used in modern architecture are inconceivable without plastics such as PLEXIGLAS®. Since ease of shaping is one of their typical properties, flat sheets can be cold-curved on site (thermoformed items are rarely used for this purpose) over a correspondingly arched supporting structure.

These are the benefits of barrel vaults:

- high loadbearing capacity if curved sheets are clamped all around,
- aesthetic appearance with high light transmission and transparency
- adaptation to virtually any building style
- cost saving due to cold curving.

Cold curving can only occur uniaxially. Pyramids, cupolas and the like have to be thermoformed. Uniaxial curving is feasible in different cross-sectional configurations, which have advantages and disadvantages, however. The compromise most often used in practice is barrel vaults in the form of circular arcs with a uniform curving radius.

Fig. 28: Types of arc:

	+	−
Parabola, hyperbola 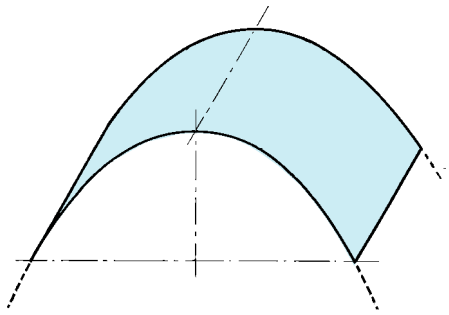	Very good load bearing capacity since stiffest where static loads (snow) act upon it	Complex substructure required
Three-centre vault, flat semi-ellipse 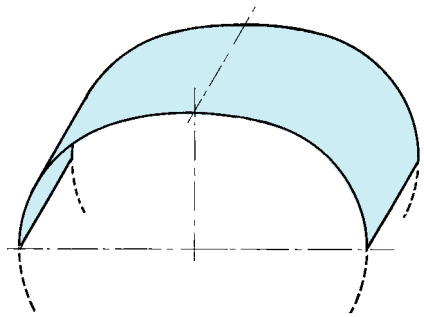	(none)	Moderate loadbearing capacity since weakest where static loads (snow) act upon it
Circle 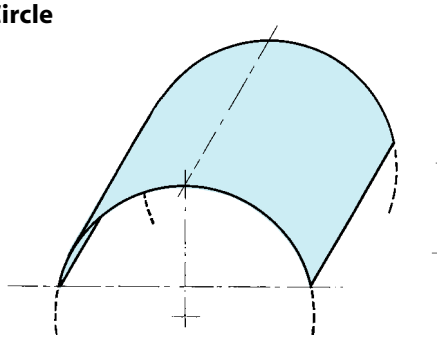	Good loadbearing capacity, simple substructure	(none)

The figure shows the structural principle of a barrel vault. On the supporting structure, the cut-to-size sheets are cold-curved over correspondingly farmed (metal) hoops and fastened with clamping bars (e.g. screwed down between the sheets) over the length of the arch. The same system is used to fasten the lower ends to the gutter sections. Compatible seals are used in between clamping system and sheet (Fig. 29). Otherwise see „Design hints“.

Fig. 29: Barrel vault: Principle and terms

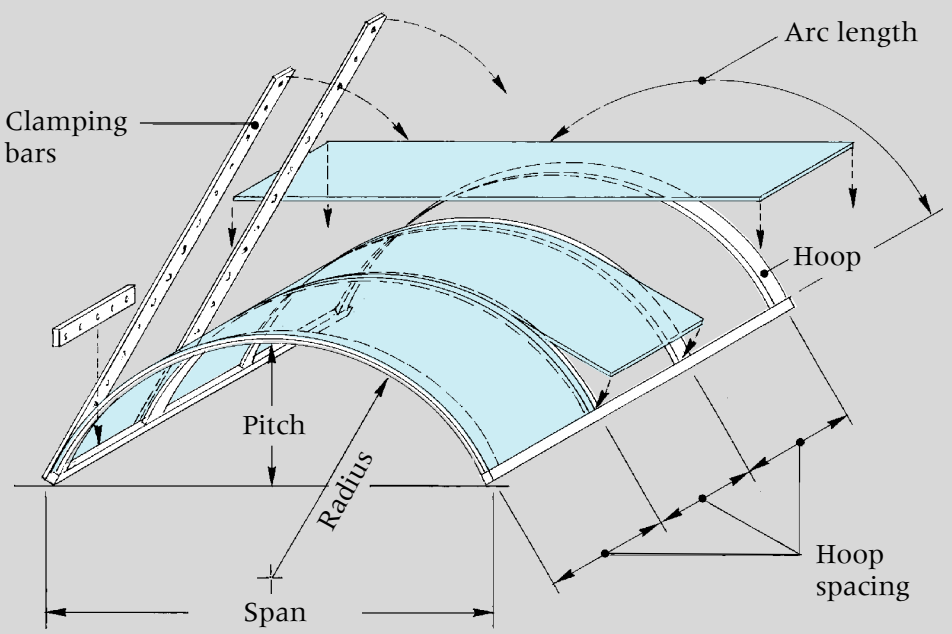

Cold curving generates stress within the material which has to be limited. Therefore it is essential to observe the **minimum cold-bending radius** (r_{min}) specified for a given sheet thickness. The radii applicable to our materials are given in Table 3 or can be calculated according to the equation described below.

Table 3: Minimum cold-bending radius

	Equation	Minimum cold-bending radius in mm per thickness in mm					
		3	4	5	6	8	10
PLEXIGLAS® GS and XT	r_{min} = **330** x thickness	990	1320	1650	1980	2640	3300
PLEXIGLAS® GS STRECHED	r_{min} = **200** x thickness	–	800	–	–	–	–
PLEXIGLAS RESIST® 45/65/75/100	r_{min} = **300/250/210/170** x thickness	900/ 750/ 630/ 510	1200/ 1000/ 840/ 680	1500/ 1250/ 1050/ 850	1800/ 1500/ 1260/ 1020	2400/ 2000/ 1680/ 1360	3000/ 2500/ 2100 1700

In order to design a barrel vault with PLEXIGLAS® one need to know at least

- **the bending radius (r):** if unknown, it can be calculated from the pitch (h) and span (s) according to this equation:

$$r = \frac{h}{2} + \frac{s^2}{8 \cdot h}$$

- **the arc length (b),** which can be calculated as follows:

$$b \approx \sqrt{s^2 + \frac{16}{3} \cdot h^2}$$

- **the hoop spacing,** i.e. the approximate width of the indi vidual cut-to-size sheets for the vault which, for reasons of material technology, should not be larger than **max. 1500 mm for all PLEXIGLAS® sheets.**

Once the designer has specified these dimensions, or they have been established on site, or calculated as indicated above, the sheet sizes can be determined taking the following into account:

- the available sizes according to our sales range brochure or as inquired of the stockist, in order to produce a minimum of costly waste;
- the necessary clearance for material expansion.

In the case of barrel vaults with greater arc lengths than the available sheet lengths, the arc has to be divided up (at the ridge or several times) by putting several sheets together with transverse joints. The same clamping systems as for the curved hoops are to be used for the transverse joints and due allowance is to be made for expansion.
The required sheet thickness can be taken from Table 4a or 4b. The values were calculated with a safety factor of 1.5 against buckling, according to E. R. Berger: "Art approximation formula for the buckling stress on a concentrically compressed arched shell," Beton- und Stahlbau 48(1953), p. 288. These data are meant as a guideline for our customers. Where proof is required, entrust an engineer with the static calculation.

Example: For a barrel vault with a snow load of 750 N/m² and a hoop spacing of 1000 mm at a radius of 3000 mm, use 5 mm thick PLEXIGLAS® or 6 mm thick PLEXIGLAS RESIST® 65.

Table 4: Sheet thickness in mm for barrel vaults:
above PLEXIGLAS® GS and XT, below all grades of PLEXIGLAS RESIST® 65

a) Wind or snow load (radial pressure) **600 N/m²**

Cold-bending radius mm	Hoop spacing in mm 500	750	1000	1250	1500
5000	5 5	5 6	6 8	8 8	8 –
4500	4 5	5 6	6 8	6 8	8 8
4000	4 5	5 6	6 6	6 8	8 8
3500	4 4	5 5	5 6	6 8	6 8
3000	4 4	4 5	5 6	5 6	6 8
2500	3 4	4 5	4 5	5 6	5 6
2000	3 3	4 4	4 5	4 5	5 5
1500	3 3	3 4	3 4	4 4	4 5
1000	2 2	3 3	3 3	3 3	3 4
500	– 2	– 2	– 2	– 2	– –

b) Wind or snow load (radial pressure) **750 N/m²**

Cold-bending radius mm	Hoop spacing mm 500	750	**1000**	1250	1500
5000	5 6	6 8	8 8	8 –	8 –
4500	5 5	6 8	8 8	8 8	8 –
4000	4 5	5 6	6 8	8 8	8 8
3500	4 5	5 6	6 6	6 8	8 8
3000	4 5	5 5	5 6	6 8	6 8
2500	4 4	4 5	5 5	5 6	6 6
2000	3 4	4 4	4 5	5 5	5 6
1500	3 3	3 4	4 4	4 5	4 5
1000	2 3	3 3	3 3	3 4	– 4
500	– 2	– 2	– 2	– –	– –

"-" = minimum cold-bending radius is being fallen short of or exceeded for the given hoop spacing

(d) Infill panels for balcony guards and staircase balustrades

Being available in many different colors and thickness, sheets of PLEXIGLAS® GS and XT are often used as infill panels for balcony guards and balustrades. PLEXIGLAS® XT sheets are, moreover, popular for their ten surface textures in thickness up to 8 mm.

PLEXIGLAS RESIST® sheets are installed where extreme impact strength is required in addition to safety for the users.

- Despite this advantage we recommend choosing somewhat thicker infill panels made of PLEXIGLAS RESIST® than of PLEXIGLAS®, so as to make up for the reduced stiffness of the impact-resistant material.

- The sheet thicknesses recommended hereafter were determined in a pendulum impact test, striking the infill panel mounted in a sturdy frame with a sand bag. The frame has a major influence on the stability of the structure; hence the need to have it tested under standard conditions by a competent institute.

- Balcony guards and staircase balustrades are subject to building inspectorate regulations, which have to be observed. A balcony infill panel, for example, must be at least 900 mm high.

- Grades of PLEXIGLAS® (STRETCHED excluded) are 'normally flammable', B 2 to DIN 4102 (Class 3 and TP(b) to British Standards) and as such approved in Germany for use in balcony guards on buildings up to two storeys high.

- PLEXIGLAS® XT sheets with one textured surface are best installed with the texture facing inwards; on the one hand because of the visual effect and on the other hand to make good use of the self-cleaning effect by rain on the outside.

(1) Clamping all around

- Many users choose standard metal sections for clamping the sheets (Fig. 30). This is possible with PLEXIGLAS® as long as due allowance is made for the change in length and **only sealants compatible with PMMA** are used.

- Commercially available installation kits as shown in figure "Clamping on two sides" are also suitable

- The lower channel sections should be provided with drain holes.

- At a maximum sheet length of 1,500 mm and a height of not more than 800 mm, the minimum required sheet thickness is 6 mm and the minimum rebate depth for the channel sections 20 mm.

Fig. 30: All-round clamping at the sheet edge

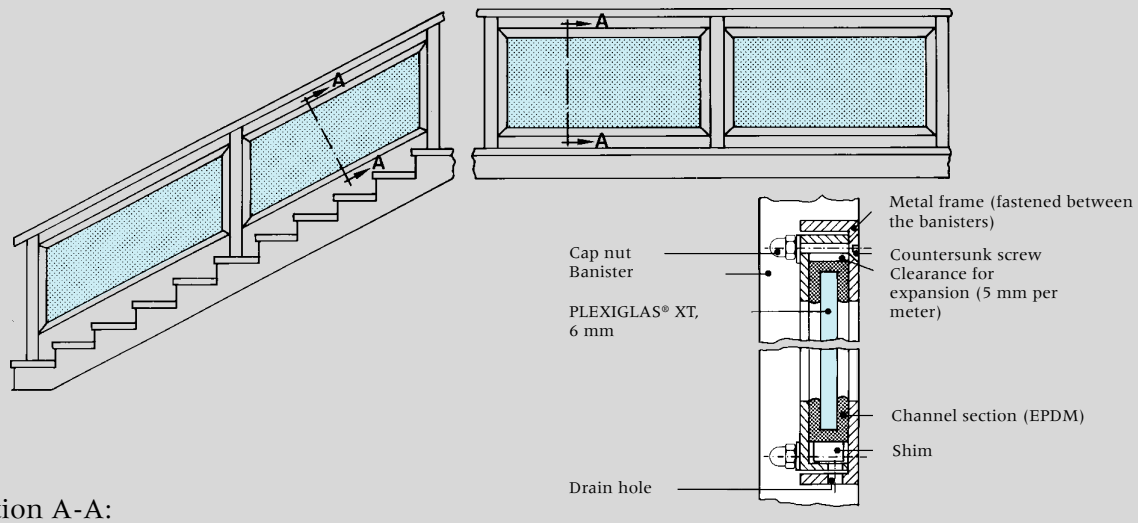

Section A-A:
Schematic of clamped fastening

(2) Clamping on two sides

- As regards expansion, sealing, sheet sizeetc., the recommendations are the same as under (1).
- Given a maximum sheet length of 1500 mm, for example, and a maximum height of 800 mm, the required sheet thickness is 8 mm and the rebate depth of the clamping sections at least 20 mm.
- Cut sheet edges that remain visible should be smoothed with a scraper or chamfered with a file.

Fig. 31: Sheet clamped at two edges

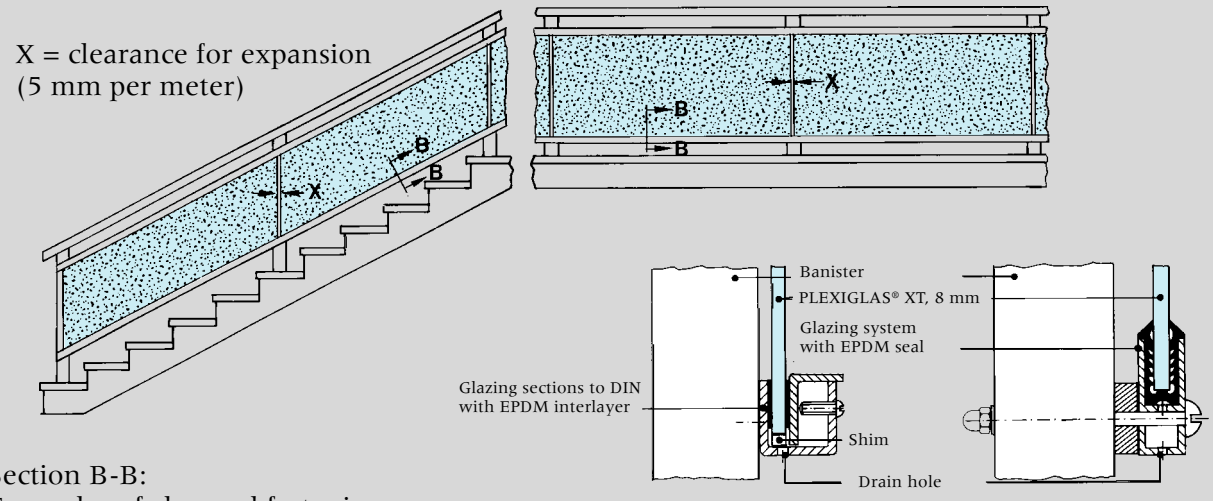

Section B-B:
Examples of clamped fastening

(3) Fastening at banisters

- If the sheets are to be installed between banisters without any further support, the necessary stiffness must be ensured by using sheets of adequate thickness between reasonably spaced banisters.

Banister spacing in m	PLEXIGLAS® GS/XT Sheet thickness in mm
1...1.2	8
1.2...1.5	10
over 1.5	min. 12

Fig. 32: Fastening to banisters

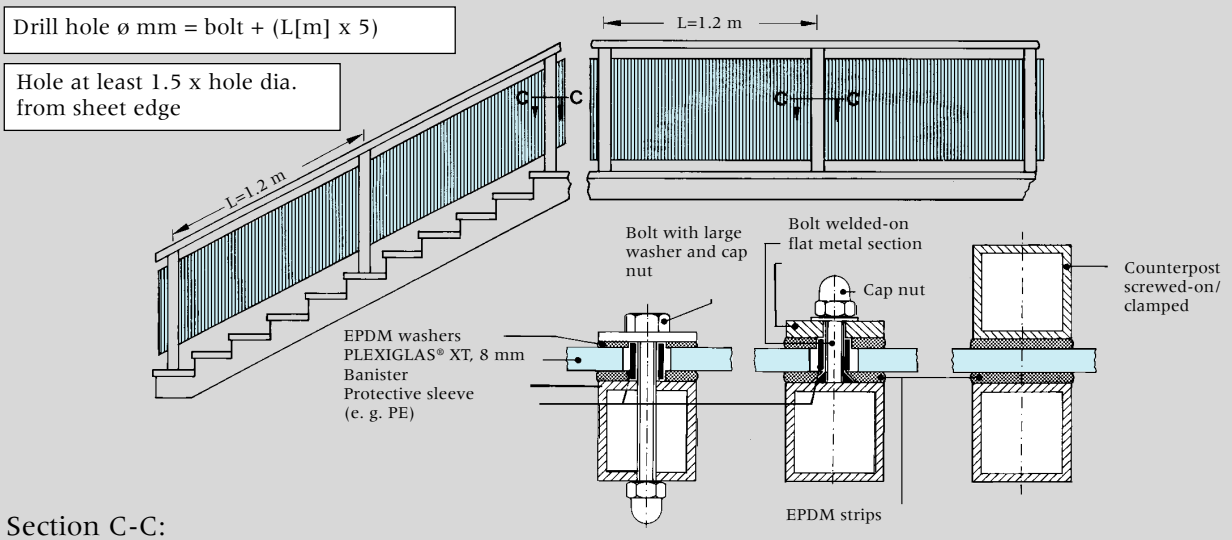

Section C-C:
Examples of screwed/clamped fastening

Thus, if the banister spacing exceeds 1.2 m, thicker sheets (outside the textured sheet range) have to be used, PLEXIGLAS® XT and PLEXIGLAS® GS sheets are available in thickness of up to 25 mm.

- Since screwed connection of acrylic is only the second-best installation method (after clamping), care must be taken to proceed according to the figure.
- Drill holes must be much larger in diameter than the screw thread.
- Protect the sheet wall inside the drill hole with a compatible sleeve (e.g. polyethylene) around the thread.
- Use large washers with the screws and compatible elastic seals (e.g. EPDM).
- Tighten the screws only to such an extent that the sheets are still able to move.

(4) Pointwise fastening

- Where metal tongues are used, the sheets are held in position by bolts and nuts, which either clamp or penetrate them according to the figure.
- Since the sheet will transmit the generated stress irregularly to the support ing balustrade, it is essential to observe every single detail mentioned under „Fastening to banis ters“ (text and figure).
- This solution is particularly elegant if the sheet edges are polished.

Fig. 33: Pointwise fastening

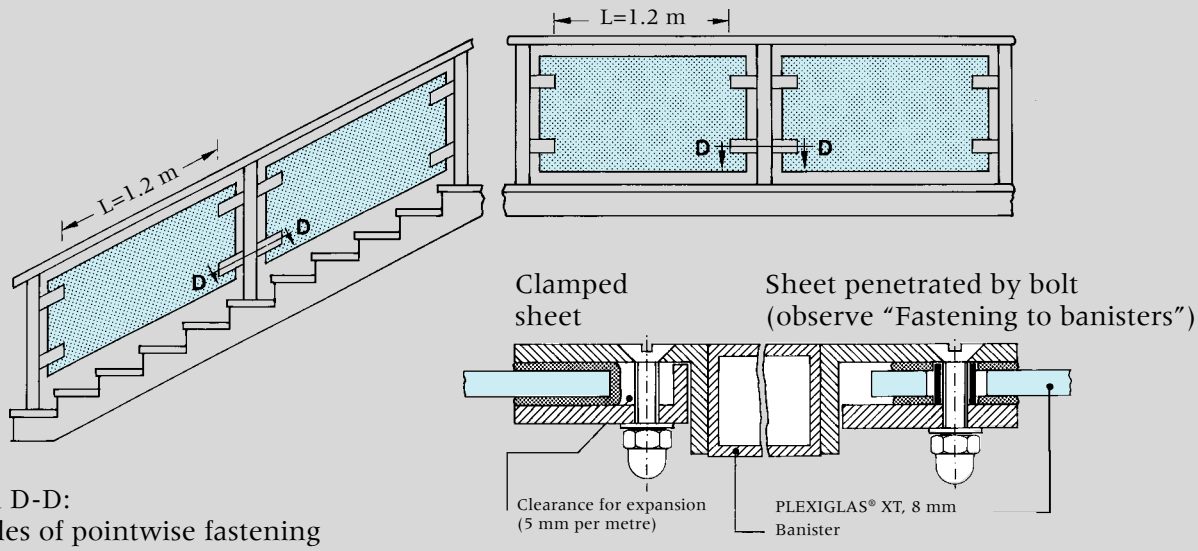

Section D-D:
Examples of pointwise fastening

(e) Walkable floor glazing

The floors or ceilings of buildings and the floors of balconies which would otherwise cast shadows are sometimes glazed to transmit light, and this glazing must then be walkable. Dance floors, too, are frequently provided with transparent and/or illuminated glazing.

PLEXIGLAS® GS sheets or blocks are optimally suited for this purpose, because,

- they are seven times as break-resistant as glass,
- show outstanding resistance to ageing,
- are available in many different load-bearing thickness and
- come in a wide variety of surface textures and colors.

Such floors must be rigid and by no means resilient.
What applies in general is that the total surface area has to be divided up into individual elements of reasonable size, A structural engineer has to be entrusted with the calculation of the load bearing substructure as a grid of longitudinal and transverse members. The regional building and fire regulations are to be observed. According to DIN 1055, ceilings, for example, have to be designed for a traffic load of 5,000 N/m², in which case the thickness according to Table 5 are recommended (sheets and blocks of PLEXIGLAS® GS cut to size without any waste):

Table 5: Thickness of walkable cut-to-size sheets or blocks of PLEXIGLAS® GS freely supported all around

Size Length x Width (mm)	Sheet/block thickness in mm: at a max. deflection of c. 1% of width	Sheet/block thickness in mm: at a max. deflection of c. 1‰ of width
500 x 500	10	20
1,000 x 500	15	30
1,000 x 1,000	20	40
2,000 x 1,200	30	60

The natural wear occurring when acrylic is walked or driven over can usually be tolerated for such floors, Otherwise the scratches can be made invisible by previous dull-grinding (e.g. using an orbital sander and wet abrasive paper). Alternatively, the PLEXIGLAS® GS sheets / blocks can be covered with textured sheets of PLEXIGLAS® XT (e.g. using ACRIFIX® 190 / CATALYST 20 for bonding) over their entire surface area. Scratches become invisible, the slip resistance is improved and the floor can no longer be seen through while remaining light-transmitting.

In the rebates of the supporting grid, which should be about 15 to 25 mm deep, the PLEXIGLAS® GS elements should rest on PMMA-compatible EPDM or polyethylene strips.

For outdoor applications in particular, PMMA-compatible silicone seals, for example, are to be inserted in the expansion joints between the glazing elements and their frames.

Fire rating

PLEXIGLAS® sheets are classified 'normally flammable' B2 to DIN 4102, M 4 to French standards and Class 3 or TP(b) to British Standards. Consult your supplier for specific test results.

PLEXIGLAS® GS 215 STRETCHED is **flame-retarded, B1** to DIN 4102.

The demands for so-called "hard roofing" (in Germany) and of the "fire resistance classes" for roof and vertical glazing cannot be met with these plastics.

Cleaning and care

- Given adequate roof pitch or vertical glazing in residential areas, cleaning on the outside is not required. Dirt is normally washed off by the rain, otherwise hosing down is enough.
- PLEXIGLAS® sheets have smooth surfaces to which dirt cannot adhere. Dust is removed with water to which some dishwashing liquid has been added and with a soft cloth or sponge. Never wipe the material dry and do not use a scouring agent. For thorough cleaning, use ANTISTATIC CLEANING AGENT (Burnus GmbH, Darmstadt), obtain able from your stockist.
- In the case of subse quently installed secondary glazing, the gap between the existing glazing and the PLEXIGLAS® sheets has to be cleaned moist and then dried before it is finally sealed.

- Should there be an unsightly scratch on a sheet of PLEXIGLAS® a rarity with textured sheets this can be removed with ease. Rough-grind the scratched area wet with waterproof sandpaper of, say, grit 240 and fine-grind with grit 400 to 600. Then polish with a soft cloth or buffing wheel, using ACRYLIC POLISHING PASTE (by Burnus) or a commercial car polish.

- Large glazing areas or facades are often cleaned mechanically. None of these methods whether rotating brushes, squeegees or the like - are suitable for PLEXIGLAS®. Even if copious amounts of water are used, the risk of scratching the sheet surfaces cannot be excluded. Commercially available high-pressure hot-water cleaning units, on the other hand, are most suitable. We recommend adjusting the pressure to between 50 and 100 bar and the water temperature to between 50 and 80 °C. Add a small quantity of a moderately foaming cleaner concentrate to the wash water via the integrated dosing unit, e.g. BURLANA® by Burnus. Subsequent wiping down is neither necessary nor advisable since the sheet surface dries well enough in air.

Suppliers

Use only (Röhm-) tested auxiliaries and the special accessories offered by the PLEXIGLAS® sheet stockists.
All phone numbers are stated according to international practice.

Article	Type	Supplier
Installation aids		
Glazing bars for clamped patent glazing	e.g. PROFESSIONAL BASE-PLATE SYSTEM	Amari Plastics PLC Holmes House GB-Weybridge Surrey KT13BAU Phone: 44-1932-835000 Fax: 44-1932-835001
PLEXIGLAS® connecting sections (Acrylic Profiles)		Richard Daleman Plastics Ltd., 1 Peverel Drive Gradby Ind. Est. GB-Milton Keynes MK1 1NJ Phone: 44-1908-365500 Fax: 44-1908-365522
Fasteners for glazing bars	'Topseal Screws'	S.F.S. Stadler Ltd. ldsall House High Street GB-Prestbury Cheltenham GL52 3AX Gloucestershire Phone: 44-1242-585400 Fax: 44-1242-520682

Article	Type	Supplier
Plastic screws	Nylon	Allthread Plastics Ltd. Ridley Road Burnt Mills Industrial Estate GB-Basildon Essex SS13 1EG Phone: 44-1268-726559 Fax: 44-1268-725287
Adhesive tapes	Lohmann-Duplo tapes	Technibond Ltd. 8 The Valley Centre Gordon Road GB-High Wycombe Bucks HP13 6EQ Phone: 44-1494-448791 Fax: 44-1494-465110
	'Kwikstick' 5474	Scapa Tapes UK. Ltd. Humphrys Road The Woodside Estate GB-Dunstable Beds LU5 4TP Phone: 44-1582-696666 Fax: 44-1582-471085
	SCOTCHMOUNT	3M United Kingdom plc 28 Great Jackson Street GB-Manchester M15 4PA Phone: 44-161-2368500 Fax: 44-161-2371105
Tools		
Circular saw bench		Schelling UK Ltd. Schelling House Sanbeck Way GB-Wetherby West Yorkshire LS22 7DN Phone: 44-1937-586340 Fax: 44-1937-586866
		Wadkin Ltd. Green Lane Road GB-Leicester LES 4PF Phone: 44-116-2769111 Fax: 44-116-2742310
	Altendorf saws	Interwood Ltd. Stafford Avenue GB-Hornchurch Essex RM11 2ER Phone: 44-1708-452591 Fax: 44-1708-457813
Circular saw blades	carbide-tipped	Gomex Tools Ltd. Orchard Road GB-Finedon Northants NN9 5JF Phone: 44-1933-680492 Fax: 44-1933-680693

Article	Type	Supplier
Sealing compounds		
Silicone sealants	'Arbosil' 1081	Adshed Ratcliffe & Co. Ltd. Derby Road GB-Belper Derby Derbyshire DE56 1WJ Phone: 44-1773-826661 Fax: 44-1773-821215
	Dow Corning 797	Dow Corning Hansil 19 Wintersells Road GB-Byfleet Surrey KT14 7LH Phone: 44-1932-351911 Fax: 44-1932-353031
E.P.D.M. gaskets		Trelleborg, Maybrook Road Castle Vale Industrial Estate GB-Minworth Sutton Coldfield West Midlands B76 8AX Phone: 44-121-3513155 Fax: 44-121-313-1192
		Reddiglaze Ltd. The Furlong GB-Droitwich Worcestershire WR9 9BG Phone: 44-1905-795432 Fax: 44-1905-795757
Cleaning and maintenance		
Sanding belts & abrasive wet/dry papers		Tool merchants D.I.Y. stores
Polishing wheels		Equip (Midlands) Ltd. Byron Street GB-Buxton Derbyshire SK17 6NT Phone: 44-1298-22233 Fax: 44-1298-72097
		W. Canning & Co. Ltd. Great Hampton Street GB-Birmingham B18 6AS Phone: 44-121-2368621

Article	Type	Supplier
Polishing wax compounds	'Unipol' 5796	Equip (Midlands) Ltd. Byron Street GB-Buxton Derbyshire SK17 6NT Phone: 44-1298-22233 Fax: 44-1298-72097
	'Vonax'	W. Canning & Co. Ltd. P.O. Box 288 Great Hampton Street GB-Birmingham B18 6AS Phone: 44-121-2368621 Fax: 44-121-236-0444
Glove lining fabric	Cotton Simplex 2130 I	W. Ball & Son Ltd. Albion Works Burr Lane GB-Ilkestan Derbyshire DE7 5JD Phone: 44-115-9322403 Fax: 44-115-9440630
Burnus ANTISTATIC CLEANING AGENT		Amari Plastics PLC Holmes House 24-30 Baker Street GB-Weybridge Surrey KT13 BAU Phone: 44-1932-835000 Fax: 44-1932-835001
Burnus ACRYLIC POLISHING PASTE		Amari Plastics PLC Holmes House 24-30 Baker Street GB-Weybridge Surrey KT13 BAU Phone: 44-1932-835000 Fax: 44-1932-835001

Certified to DIN EN ISO 9001 (Quality)
and DIN EN ISO 14001 (Environment)

www.plexiglas.de

Our technical advice on the uses of our materials is given without obligation. The buyer is responsible for the application and processing of our products and is also liable for observing any third-party rights. Technical data concerning our products are typical values. Subject to alteration.

® = registered trademark

PLEXIGLAS,
PLEXIGLAS ALLTOP,
PLEXIGLAS DAYLIGHT,
PLEXIGLAS FREE FLOW,
PLEXIGLAS HEATSTOP,
PLEXIGLAS RESIST,
PLEXIGLAS SATINICE,
PLEXIGLAS SOUNDSTOP,
ACRIFIX,
EUROPLEX,
ROHACELL
are registered trademarks of
Röhm GmbH & Co. KG, Darmstadt,
Germany.

Important Notice: This is an international English-language version prepared for several markets. It is essential that the selection of particular materials and their methods of use conform with the requirements of national and local Building Regulations.

Advice and delivery by:

30/0502/01233 (e)